Gold

Trusted Master Data in 90 Days!

Onboard, Match & Govern - One platform to close the gap and deliver trusted masters.

Trusted Master Data – the must have foundation

Data everywhere. Decisions nowhere: Your business needs trusted, explainable, real-time data; your estate delivers silos, copies, and doubt.

What the business requires (now)

- **Reliable truth:** one customer/product/supplier view
- **Speed to value:** weeks, not quarters
- **Explainability & compliance:** audit-ready lineage, PII control
- **AI-readiness:** clean, consistent signals for LLMs & analytics

The Bridge : Mastering Data (MDM)

Unify & standardize:
golden records with survivorship & hierarchy

Govern & explain:
policy, lineage, and stewardship in-product

Publish & share:
marketplace for trusted reuse across teams

What the data ecosystem delivers (today)

- **Storage-first, not mastering:** Lakes/warehouses collect everything but don't resolve duplicates, hierarchies, or survivorship.
- **Time variance & noise:** Batch windows, late updates, and transactions produce multiple, conflicting versions
- **Blocked AI & Analytics:** noisy masters degrade models and KPIs

Faster launches and cleaner KPIs | Lower services/ops overhead, predictable cost | Safe, explainable AI and compliant reporting

Why Master Data Still Drains Time, Money, and Patience?

Missed matches, duplicates, and unmanaged masters don't just slow AI, they burn millions per year in rework, risk, and wasted spend. Mastering data is the fastest way to stop the bleed.

Complex Platforms

MDM tools still demand heavy configuration, manual setup, and long onboarding cycles.

Disparate Sources

Data comes from dozens of systems, formats, and APIs — but never arrives ready to work together.

Fragmented Tools

One tool for DQ, another for Governance, another for Cataloging — each with its own rules, connectors, and learning curve.

Manual Rules

Data mapping, validation, and cleansing often rely on human-built logic that doesn't scale.

Slow Outcomes

Value delayed by dependency — on consultants, on integrations, on internal bandwidth.

AI readiness Gaps

Master data lacking consistency, lineage, and governance; blocks LLM use, fine-tuning, and safe automation.

Gold Trusted Master Data

easier – faster - simplifAIed

Your single source of truth with built in intelligence: It brings automation and AI to every layer, making master data management faster, smarter, and radically simpler.

Easier

No code. No chaos.

- Drag-and-drop configurations
- Built-in validations.
- Supports multiple domains with easy configurations
- Additional DQ Rules & Workflows Your engineers configure; you don't need a consulting army.

Faster

From setup to success in weeks

- User configurable application, drives speed in Implementation
- Pre-modeled entities with smart templates
- Self-learning workflows cut go-live time by 70 %.
- Start your MDM rollout in 90 days

SimplifAIed

Simplicity powered by intelligence.

- Automatic schema detection
- Simple to onboard Data
- AI maps data, recommends rules, and augments quality & stewardship in the background.
- Validate and create trusted data with out any coding
- It doesn't replace people — it removes their busywork.

Gold **Easier** - Because Master Data Shouldn't Feel Manual

easier – faster - simplifAIed

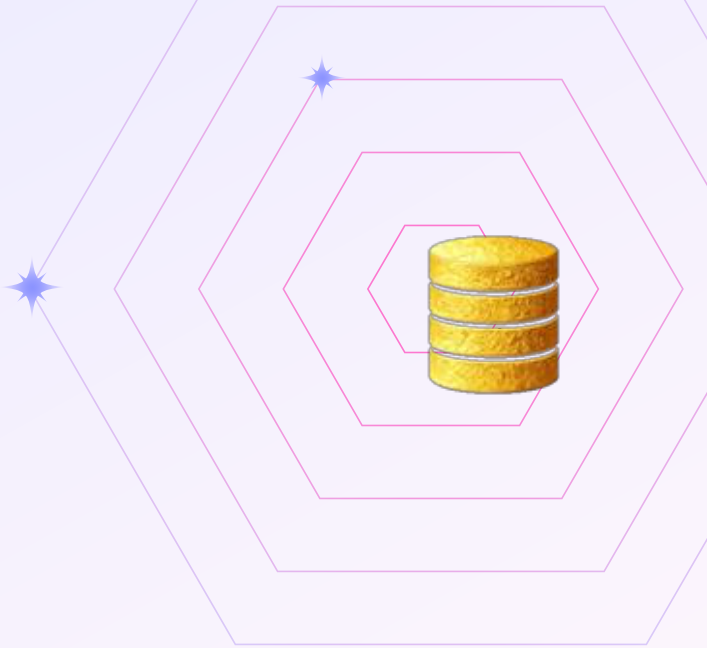

Easier means no-code workflows, effortless connections, and a platform that stays out of your way.

No-Code Onboarding

Drag, drop, connect - sources go live in minutes, not weeks with built in validation.

One-Click Integrations

Connect instantly to top databases, clouds, and data tools - no custom plumbing or scripting.

Prebuilt Models & Templates

Start from best-practice entity structures instead of blank screens.

One Interface

MDM, DQ, Compliance, and Marketplace - all in one clean workspace.

Gold **Faster** - Because Value Shouldn't Take a Year

easier – faster - simplifAIed

Faster means reaching trusted, actionable data in weeks, not quarters.

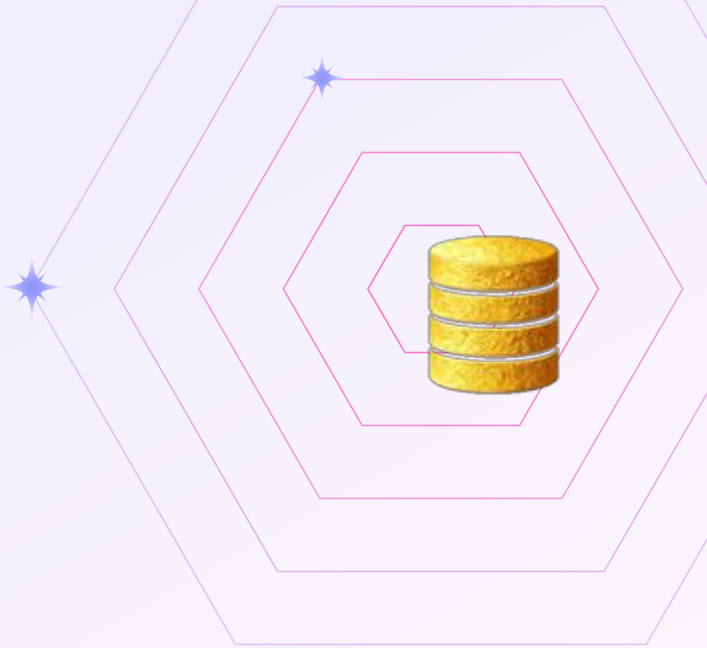

90-Day Time-to-First-Value

Prebuilt models, templates, and guided flows dramatically shorten the path from setup to outcome.

Automated Setup Workflows

UI driven configuration for matching, survivorship, and quality rules instantly - eliminating manual rule-writing cycles (Powered by AI)

Real-Time Synchronization

Changes in source systems reflect in DIP immediately - no batch delays, no stale records.

Zero-Wait Governance

Policy mapping, lineage, and classification update instantly as data flows, ensuring compliance keeps pace with the business.

Speed isn't accidental. It's engineered

DIP accelerates every step of the MDM journey - from onboarding to mastering - with automation built into the core.

Gold **SimplifAIed -** Simplicity Powered by Intelligence

easier – faster - simplif**AI**ed

SimplifAIed means every complex step — mapping, matching, modeling, governing is automated.

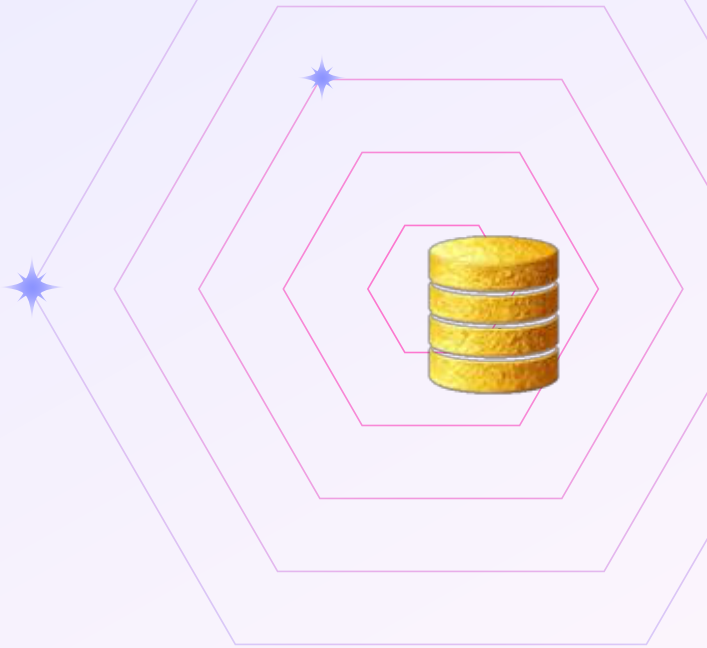

AI-Led Data Mapping

Understands your data structure, aligns attributes, and identifies relationships automatically.

Smart Rule Recommendations

Generates and tunes quality, matching, and survivorship rules without manual logic or scripting.

Auto-Classification & Detection

Identifies sensitive fields, semantic meanings, and policy requirements instantly - no config needed.

Agentic Capabilities

Use your own LLM tokens inside your ecosystem, or DIP's embedded LLM included in the license - either way, intelligence stays under your control.

AI woven into the fabric

Simplicity isn't the absence of complexity - it's intelligence handling the complexity for you.

Gold Why?

Trusted master data simplif**AI**ed

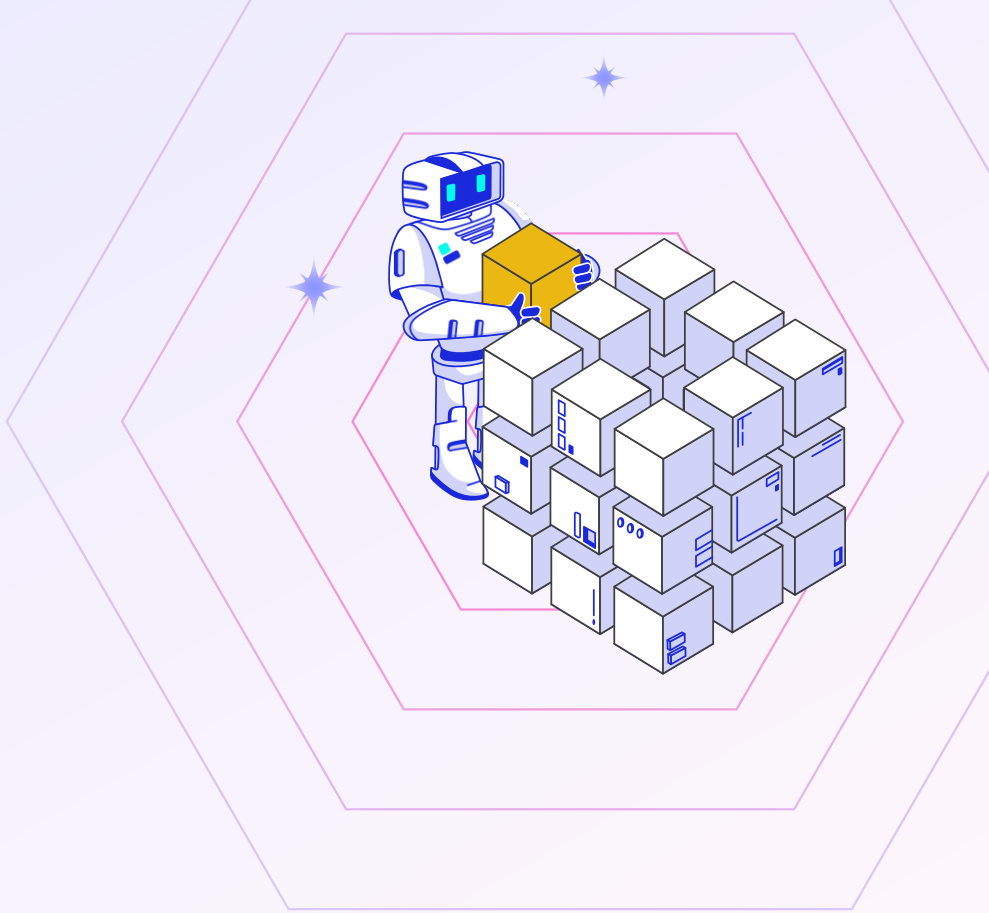

Your single source of truth with built in intelligence

We took everything slow, heavy, and over-engineered about MDM - and built the opposite: faster, simpler, and smarter by design.

AI Built In, Not Bolted On

Automation runs through the core: onboarding, rule generation, stewardship, and governance.

Easier to Run

Low-code configuration, clear UX, and self-learning features so that your engineers control it; your analysts actually use it.

Unified by Design

MDM, DQ, Compliance, and Marketplace in one workflow - not four products that pretend to be one.

Faster to Value

90-day time-to-first win with reusable templates and built-in accelerators

Cost That Scales with Sense

User based license not the consumption, modular deployment, and minimal services dependence, hence You pay for capability, not the data tax

Gold Features...

Administration

- Data Modeler
- Graphical View for Data repo
- Matching and Survivorship Rules
- Operational Metrics

Configuration & Rules

- Connections
- Reference Tables & Enumerations
- DQ & Validation Rules
- GUI for Data mapping

MDM Processes

- Data Modeler
- Graphical View for Data repo
- Matching and Survivorship Rules
- Operational Metrics

Data Stewardship

- Data Stewardship tool
- DS Workbench

Data Quality

- AI powered Data Assets
- AI rule generation
- Data Discovery
- DQ Report

Data Browser Journal & Audit Trail

- Master Data Browser
- Journal entries
- Audit Trail at a record level

Platform Productivity..

Intuitive, Easy-to-use Interface

Attribute level visibility

Relationship, Hierarchy Definition

Rule based Visibility

Role based access control

Auto Generated DB Objects

Workflow Management

Operational Dashboards

Bulk Updates

Gold

Built for you: DIP gives your team the tools - and the automation - to do it themselves.

AI-First Data Quality & MDM

Automate rule generation, mapping, matching, merging, and stewardship.

Built-In Compliance, Zero Workflow Friction

Integrated policies, source traceability, and audit-ready logs so governance and regulations are handled.

Frictionless Onboarding, Modernization & Sharing

Low-code pipelines, schema inference, and a built-in data marketplace let teams plug in any source, automap, and publish - no ETL rewrites, no extra tools.

91.67%
Purity of Data

58.3%
Cost Optimization

Gold

Built for RoI : Every capability designed to create faster insights, lower cost, and higher confidence in decisions.

Turn Trusted Data into Measurable Business Impact

Accurate, consistent, compliant data improves forecasting, reporting, and decisions — driving revenue, reducing risk, and strengthening brand trust.

One View of Customers, Products, and Partners

MDM creates a single, reliable view across the business — enabling better LTV tracking, cleaner reports, faster onboarding, and fewer costly errors.

Faster Access to Revenue, Lower Cost to Serve

Rapid onboarding of new data sources and easy data discovery cut project delays, reduce IT dependency, and let teams reuse what works instead of rebuilding.

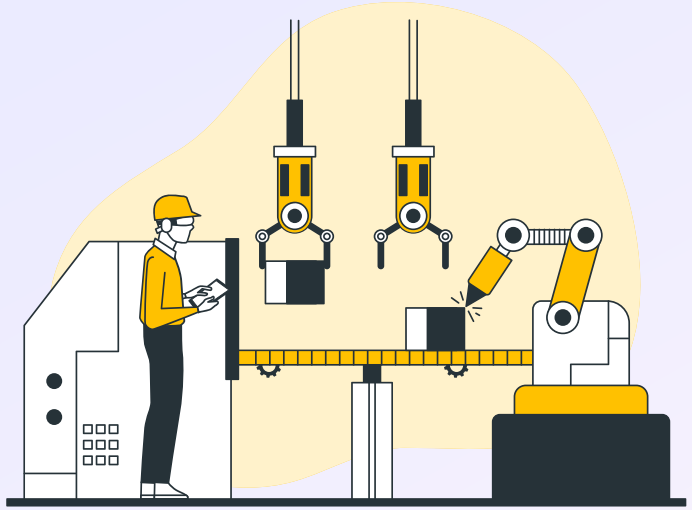

Gold

Manufacturing where Precision Starts With Clean Data

DIP simplifies material, vendor, and BOM mastery with templates and AI that maintain themselves.

Built for OT & IT

Clean Architecture, Clean Data

- Material, vendor, and BOM templates aligned with UNSPSC/eClass.
- AI-driven attribute inference for specs, units, alternates, and dedupe.
- Plug-and-play ERP integrations (SAP, Salesforce, Oracle Fusion, Dynamics, Infor).

Targeted for RoI

Data to drive growth

- Reduced procurement spend through duplicate elimination and normalized pricing.
- Lower inventory cost with clean materials data and consistent units.
- Faster production planning powered by harmonized BOMs.

Manufacturing demands aligned definitions, accurate specs, and unified sources of truth.

Different industries. Same result — trusted data, faster.

Every implementation tells the same story: faster setup, simpler management, and measurable business impact.

Massive human capital data for Middle eastern govt, up and running in less than 2 quarters

Auto finance company, mastered customer data in less than a quarter, powered their customer facing mobile app promoting digital transformation. No external consultants to maintain it.

Insurance giant customer master. Master data implemented amidst migration to cloud from on-prem. Platform held it's ground for both on-prem and cloud sources. Scaled and executed with ease.

Manufacturing giant procured MDM for multi domain mastering. Only training given, team is in full DIY mode mastering their domains with 0 external consultants.

Deploy & Grow

Simple to start. Seamless to scale. Because flexibility shouldn't mean fine print.

Deployment Options

Your environment. Your control.

- **On-prem / Private Cloud** – For organizations that keep data in-house.
- **Hybrid** – Extend on-prem data securely into the cloud.
- **SaaS** – Fully hosted, always updated, zero infrastructure overhead (Coming soon).

Same platform. Same experience. Wherever you run it.

Licensing Model

Straightforward. Predictable. Transparent.

- **User-based licensing only** — no volume, record, or transaction fees.
- Each capability is modular — adopt what you need, when you need it.
- AI included:
  - Use your **own LLM tokens** for full ecosystem control.
  - Or use **DIP's LLM**, baked into the user license — no hidden AI surcharges.

You own the data, the tokens, and the pace.

Growth Philosophy

Start small. Scale without reset.

- Start with **Data Quality**, then scale to **Compliance**, **MDM**, and **Marketplace** as your maturity grows.
- Begin with clean data → add compliance → master entities → enable sharing.
- Every phase delivers independent value; the platform evolves with you.

One path. Four steps. Continuous ROI.

Comparison Table

Understand the need and choose the right option

Evaluation lens	DGold	SAP MDG	Oracle	Informatica	Ataccama	Stibo Systems	Profisee	Semarchy
Time to initial value	90 days; AI-assisted onboarding, match & survivorship	Strong control; typically longer cycles	Often part of larger programs	Broad suite; implementations can be heavy	Modern UX; relatively faster	Excels in product/PIM programs	90-day patterns common mid-market	Agile/Quick Start style deployments
Unified platform breadth (MDM + DQ + Governance + Marketplace)	Native, one interface; no module sprawl	Deep governance for SAP estates	MDM + Oracle stack components	Very broad portfolio; multi-SKU	Wide feature set; modular	Strong Product/PIM depth	Focused MDM; MS-aligned	Unified xDM hub
AI in the fabric (rule suggestions, mapping, PII, reconciliation)	Built-in "quiet AI" across flows	Workflow/model emphasis	Less explicit in marketing	AI present across suite	Strong augmented claims	AI focus in product domain	Focused; less AI-forward	Business friendly + fast
Services / TCO	Lower services; predictable licensing	High TCO in large estates	Complex adoption cost	Premium pricing & services	Competitive vs leaders	Varies by domain	Cost-effective mid-market	Competitive mid-market
Deployment flexibility	Your infra or hybrid; use instantly	Cloud + hybrid	OCI-centric + hybrid	Cloud + hybrid	Cloud / on-prem / hybrid	Cloud focus	Azure-friendly (MS stacks)	Cloud / on-prem / hybrid
Best-fit sweet spot	Teams needing fast wins without module sprawl	SAP-heavy enterprises prioritizing control	Oracle estates seeking stack synergy	Very heterogeneous large enterprises	Modern MDM + DQ seekers	Retail/manufacturing product data	Mid-market; Microsoft ecosystems	Mid-size enterprises wanting agility

Thank You!

PHONE

+1 888 840 0098

EMAIL

sales@amurta.com

WEBSITE

www.amurta.com
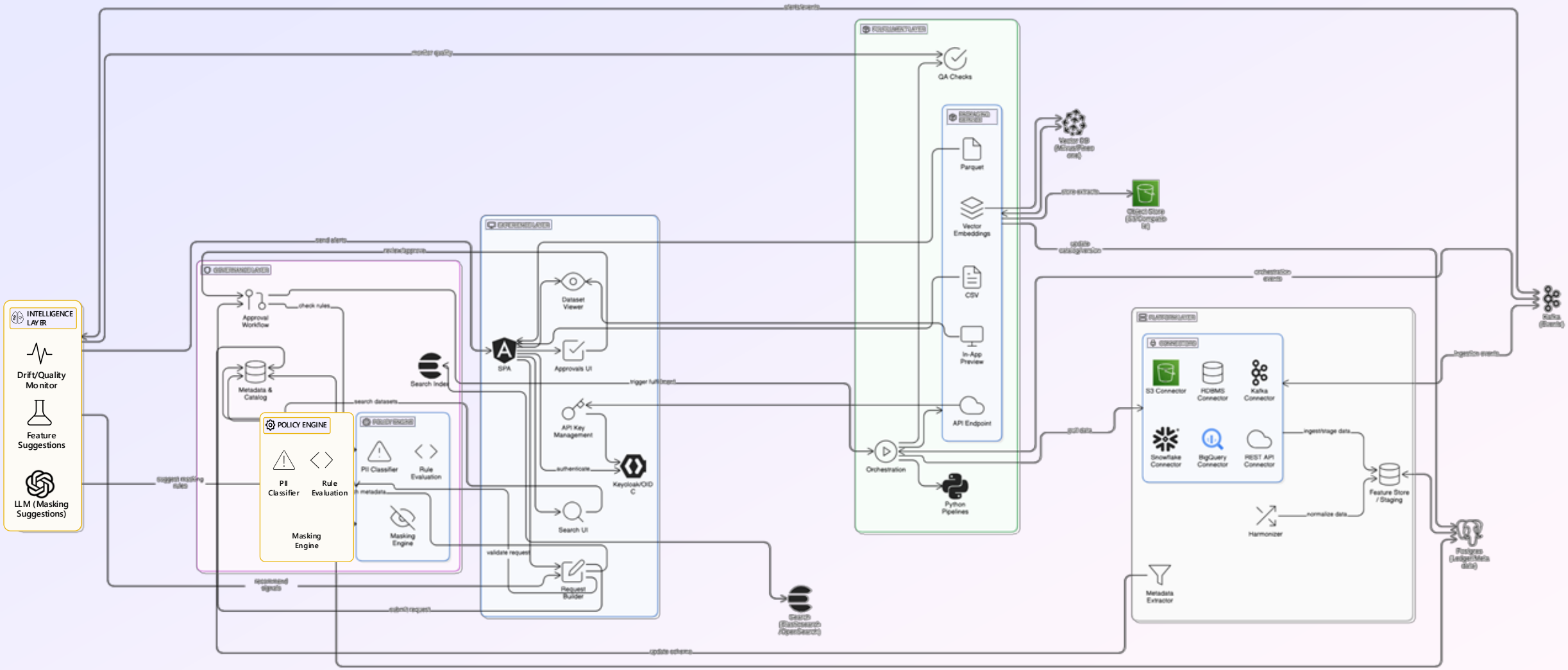
Architecture Diagram